AMERICAN SPECIALTIES, *INC.* *441 Saw Mill River Road, Yonkers, NY 10701*	MODEL No:	5002
	ISSUED:	1-87
	REVISED:	9-04

RECESSED MOUNTED DISPOSABLE CARTRIDGE SOAP DISPENSER

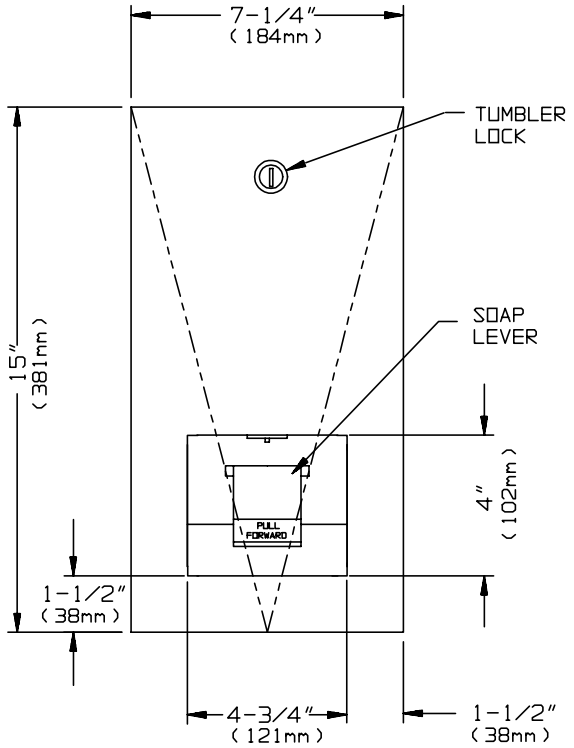

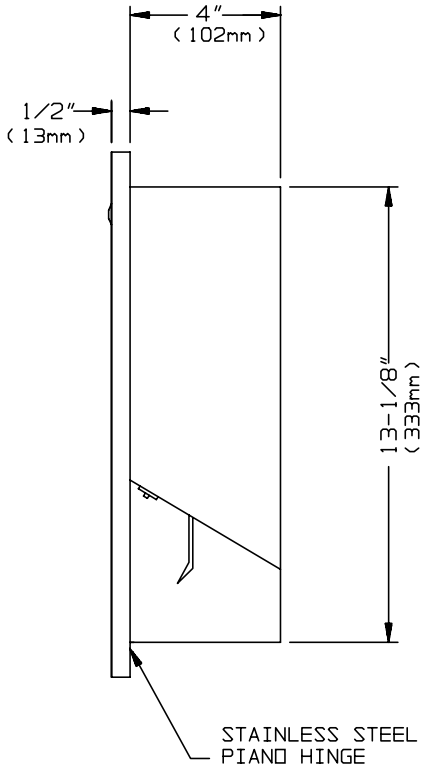

SPECIFICATION

Recessed Mounted Disposable Cartridge Soap Dispenser Unit shall be fabricated of alloy 18-8 stainless steel, type 304, 18 gauge. Face trim shall be 1″ (25mm) wide formed from one piece with no visible open seams with a 1/2″ (13mm) square return to wall. Dispenser lever shall be a ruggedized Zamak alloy casting. Dispenser door shall be attached to unit at the side with a full length 3/16″ (5mm) dia. stainless steel multi-staked piano hinge and shall be held closed with a tumbler lock keyed alike to other ASI washroom equipment. A refill viewer slot shall be provided at front face. Valve shall be fabricated of heavy-duty vinyl and shall be permanently attached to a disposable soap cartridge.

Recessed Mounted Disposable Cartridge Soap Dispenser shall be Model № 5002 as manufactured by American Specialties, Inc., 441 Saw Mill River Road, Yonkers, New York 10701-4913.

INSTALLATION

Unit is recessed mounted in wall or partition using № 10 self tapping screws (by others) through concealed mounting holes. For compliance with ADA Accessibility Guidelines, unit should be installed so that dispenser lever is 54" (1372mm) maximum above finished floor (AFF) if clear floor side reach access is provided or 48" (1219mm) maximum AFF if clear floor forward reach access is provided or 46″ (1168mm) max. AFF if side reach over an obstruction is only provided (i.e. vanity). For general utility install unit so that lever is 46″ (1168mm) AFF or 15″ (382mm) above wash basin.

Rough Wall Opening (RWO) required is…… 5-3/4″W x 13-1/2″H x 4-1/4″D (146mm x 343mm x 108mm)

OPERATION

Soap is forced through disposable valve by pulling a lever forward. Disposable cartridges are available to dispense soap, hand lotion, heavy duty cleaner, waterless cleaner and antiseptic soap and are typically good for 1500 washings. Typical soap cartridges are super-concentrated cleansing formula approved for medical and food handling facilities.