REV.	DESCRIPTION	DATE	APPROVED
0	Initial Release	12/18/2008	JXxxxx
1	Updated mounting height: 51.5in to 48.25in	2/07/13	LP

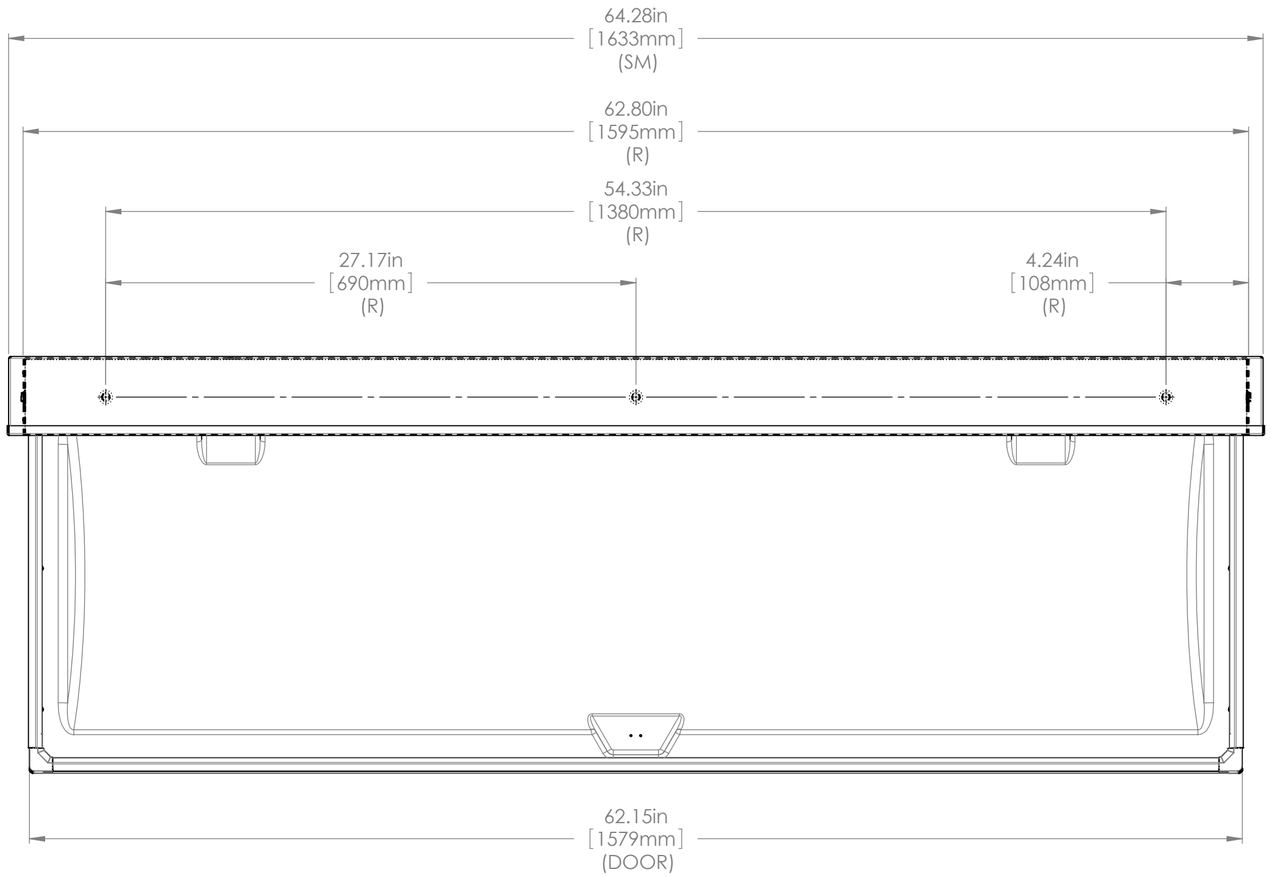

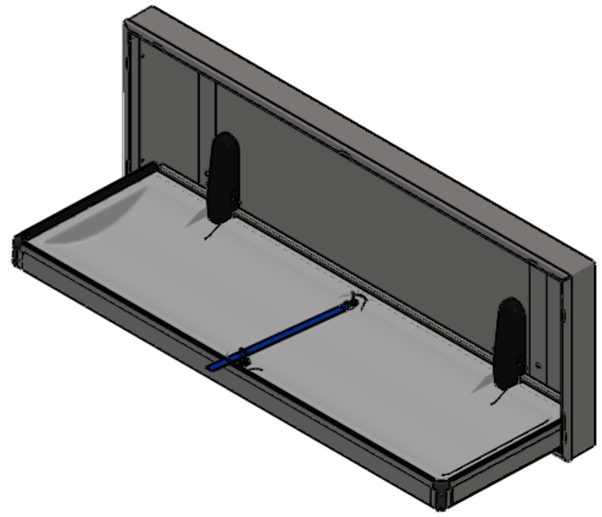

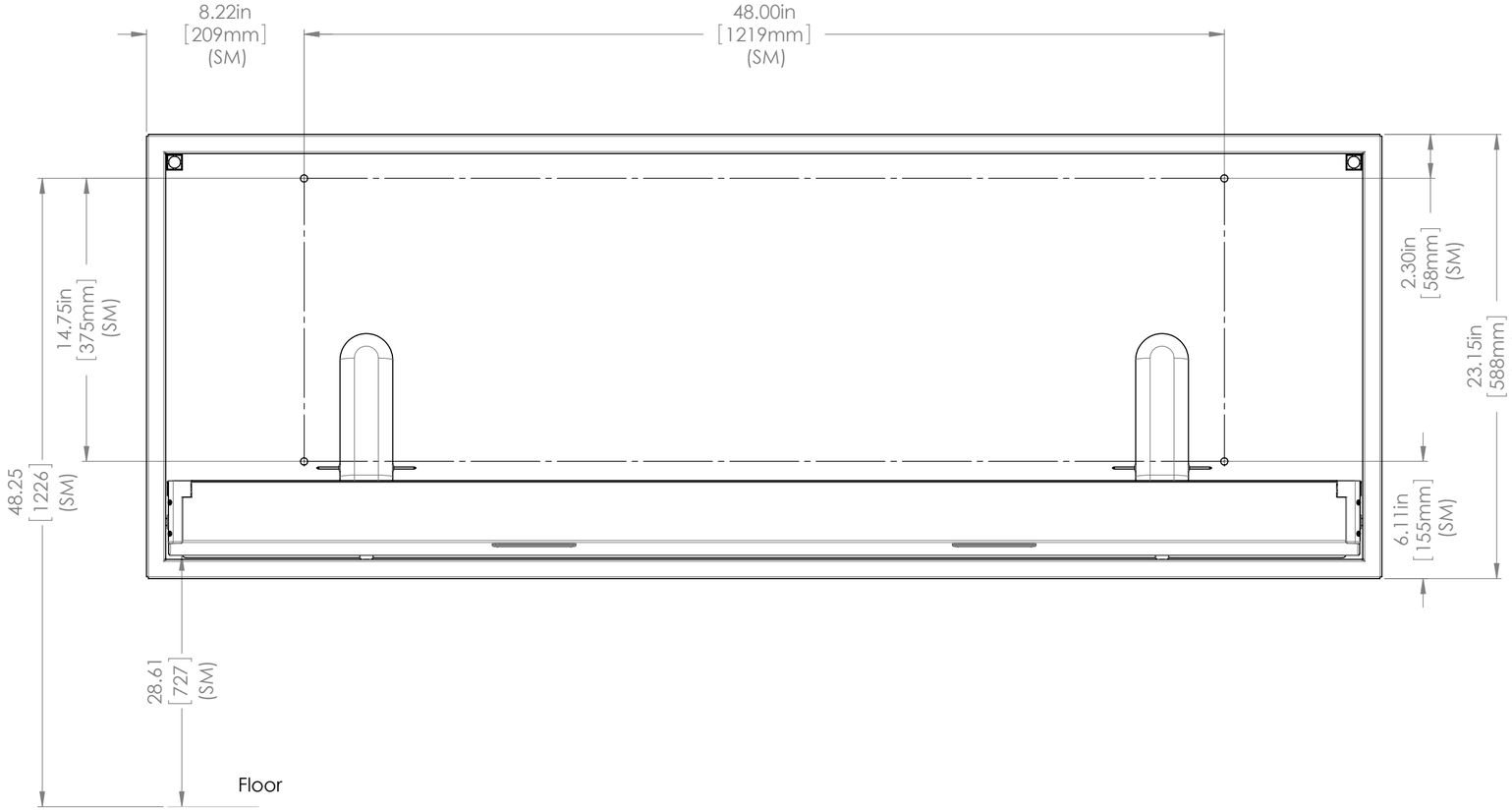

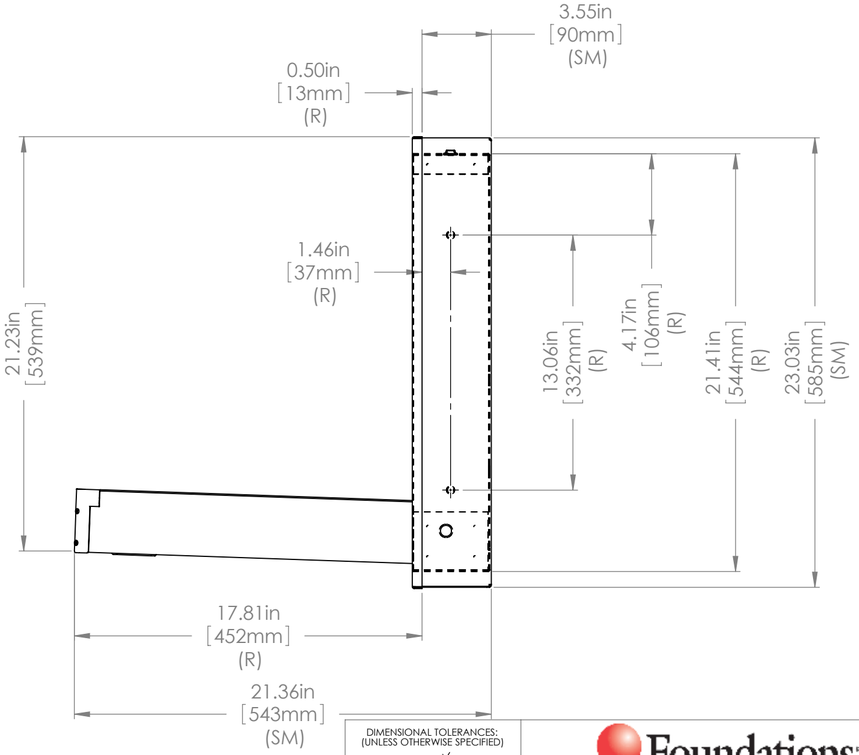

Distributed by
www.AmeraProducts.com
Phone: (800) 608-6568
Fax: (409) 840-5545
info@ameraproducts.com

Notes:
SM - Surface Mount
R - Recessed Mount

DIMENSIONAL TOLERANCES:
(UNLESS OTHERWISE SPECIFIED)
FRACTIONAL: ± 1/32"
MACHINED ANGLES: ± 0.5°
BEND ANGLES: ± 1.0°
0.XX: ±0.040 in [1mm]
0.XXX: ±0.0150 in [0.38mm]

Foundations

DESCRIPTION: Architectural layout for 100SSE

MATERIAL:	PART NO:		SCALE:	REV:
N/A	Arch - 100 SSE		NTS	1
FINISH:	DRAWN BY:	DATE:	SIZE:	SHEET
N/A	JXxxxx	12/18/2008	C	1 OF 1

PROPRIETARY AND CONFIDENTIAL
THE INFORMATION CONTAINED IN THIS DRAWING IS THE EXCLISIVE PROPERTY OF FOUNDATIONS WORLDWIDE, INC. ANY REPRODUCTION OR USE OF THIS DRAWING, IN PART OR IN WHOLE WITHOUT THE EXPRESSED PERMISSION OF FOUNDATIONS WORLDWIDE, INC IS PROHIBITED.

\\DELLSRV\Product Development\Products\Changing Stations\Architectural Drawings\