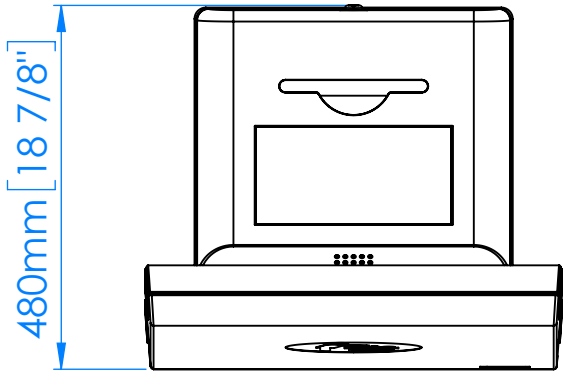

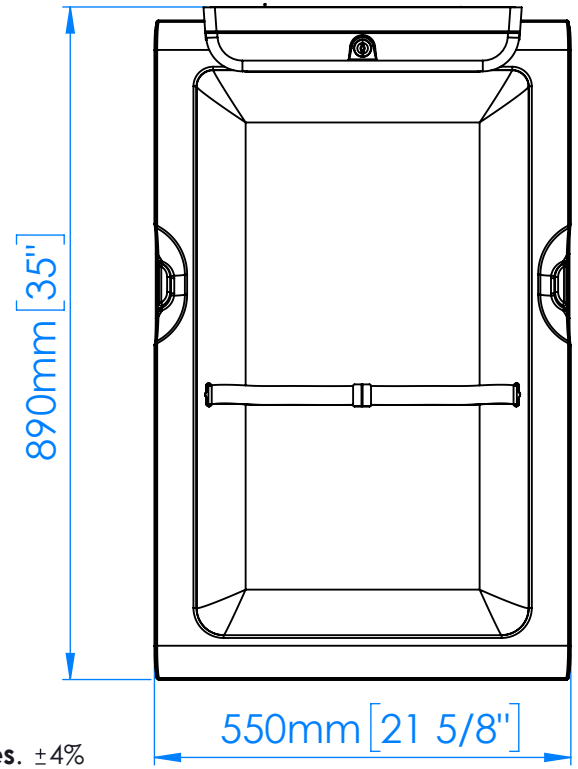

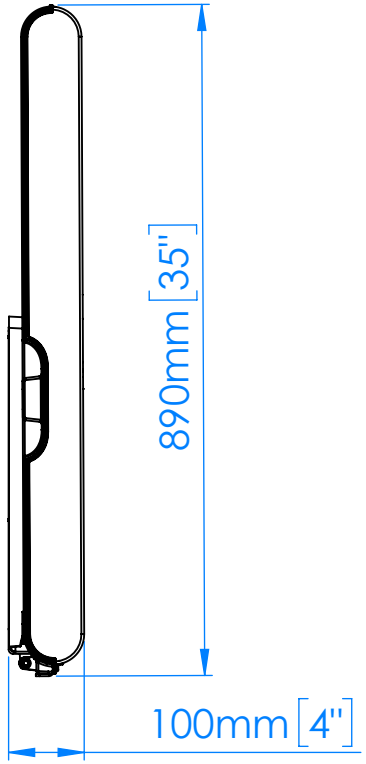

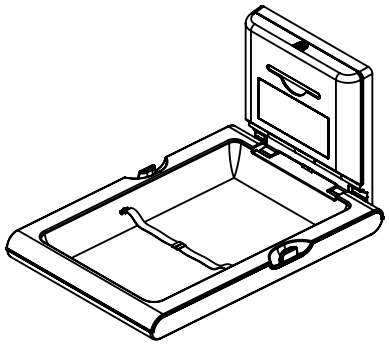

Scale / Escala: 1:10
Dimensions / **Dimensiones**. ±4%

Distributed by
www.AmeraProducts.com
Phone: (800) 608-6568
Fax: (409) 840-3541
info@ameraproducts.com

saniflow corp
a mediclinics company

Mediclinics vertical baby station - babymedi
Cambia pañales vertical Mediclinics - babymedi

Ref. / Code	Material	Acabado / **Finish**
CP0016VCS-I-ASTM	PP / Acero inox - **Stainless steel**	Satinado / **Satin**
CP0016VCSB-I-ASTM		Epoxi negro / **Black epoxy**

Date / **Fecha:** 16/06/2021