MODEL 9905

BED PAN/URINAL HOLDER

- Surface Mounted

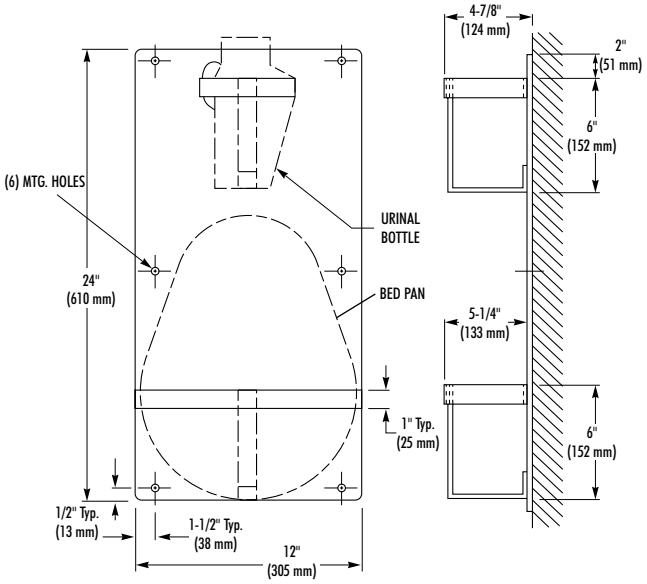

CONSTRUCTION:

- **BACK** fabricated of type 304 (18-8), 18 gauge stainless steel with exposed surfaces in architectural satin finish. Welded construction with burr-free edges.
- **BRACKETS** fabricated of type 304 (18-8), 16 gauge stainless steel with exposed surfaces in architectural satin finish. Welded construction with burr-free edges.

OPERATION:

Unit holds (1) conventional size bed pan and (1) urinal bottle. Accessories not included.

INSTALLATION:

Secure to wall with mounting screws (included) at holes provided.

GUIDE SPECIFICATION:

Surface mounted Bed Pan/Urinal Storage Holder shall be fabricated of type 304 (18-8), heavy gauge stainless steel with exposed surfaces in satin finish.

Overall dimensions: 12"W x 24"H. Projects 5-1/4" from finished wall.

Surface Mounted Bed Pan/Urinal Storage Holder shall be Bradley Model 9905.

Document No. 9135

This information is subject to change without formal notice.
MD 3239-1198

Bradley CORPORATION
WASHROOM ACCESSORIES DIVISION